Assessing the thermal distortion caused by spindle rotation of a machining centre using the draft standard ISO / DIS 230-3

A. Statham (a), A. Martin (a), D.M.S. Blackshaw (b)

(a) *School of Manufacturing and Mechanical Engineering, The University of Birmingham, B15 2TT, UK*

(b) *ITP Ltd., Rugby, Warwickshire, CV21 3RQ, UK*

Abstract

This paper presents the results of an investigative study using the draft international standard ISO 230-3 as the basis to test the behaviour of a machine tool structure subjected to thermal effects produced by spindle rotation. For these tests a special two sphere mandrel was fitted into the spindle of a vertical machining centre, while a fixture capable of holding five displacement transducers is clamped to the machine worktable. Five capacitance non-contact probes were located into the fixture, providing for three orthogonal displacements and two tilt measurements. Tests were performed using both of the prescribed methods laid down in the draft standard, namely constant spindle speed and variable spindle speed. Temperatures, displacements and tilts were recorded for the duration of each test. From the investigation recommendations are made for amendments to the standard that need to be considered for inclusion in the final version of the draft standard.

Introduction

With the ever increasing demand for closely controlled, high precision components, the need to ensure that the machine tools on which these components are produced are performing to their quoted accuracy specifications is now of paramount importance. As a result test conditions for assessing the performance of machine tools not only encompass standard tests for positioning accuracy and repeatability, angular, straightness, squareness and circularity errors, but now also include dynamic accuracy of machine spindles and drift and tilt errors due to thermal distortion of the machine tool structure.

A new draft International Standard ISO / DIS 230-3 [1] is about to be published which gives the general method of test for assessing machine tool spindle and thermal distortion measurements using non-contact capacitative

probes. Other national standards are already in place including British Standard BS3800 : Part 3 : 1990 [2] and ASME B5.54 - 1992 [3] from the United States. This level of activity clearly shows an increased level of interest in spindle errors and thermal distortion. It is generally felt that spindle error analysis can lead to even greater precision and more uniform parts by enabling the process engineer to identify, quantify, and then minimise spindle errors, while manufacturing engineers can also meet the challenge of today's surface finish and form tolerance requirements.

In order to test the validity of the recommendations made in this new draft standard an investigation was conducted aimed at highlighting any practical difficulties in performing the tests along with the objective of making recommendations for improvements to the general method of test outlined in the standard.

Background

Spindle analysis was originally devised by Dr Jiri Tlusty who performed research in Czechoslovakia in the late 1950's [4]. He was the first to use capacitance based non-contact displacement transducers mounted at 90 degrees from each other along the X and Y axes. Using this technique he was able to display a polar plot of the radial error motion of a spindle operating at speed. Further research on the topics of machine tool spindle errors and thermal distortion were later undertaken in the United States at Lawrence Livermore National Laboratories in the 1960's and 1970's, and the UK based Advanced Manufacturing Technology Research Institute (AMTRI) in the 1980's and 1990's [5].

An ideal machine tool spindle allows motion in only one degree of freedom: that is rotation about the axis line. Motion in the other five degrees of freedom are therefore considered undesired motions. All these motions however occur simultaneously and must be measured as the spindle is rotating at normal operating speeds. Some errors such as asynchronous error motions occur quickly and require relatively fast data acquisition while others such as thermal growth or thermal tilt may occur over a period of many hours [6].

The six degrees of freedom are:

- linear translation in X
- linear translation in Y
- linear translation in Z
- tilt along the axis of rotation in the X direction
- tilt along the axis of rotation in the Y direction
- tilt about the axis line

All spindle errors are measured in terms of relative motion or change in position between a spindle and a stationary element of the machine tool. It is this unwanted relative motion between the tool and workpiece that causes degradation in surface finish, roundness, feature size and feature location.

Commercially available spindle error analysers are now available to provide a hardware and software package for machine tool performance monitoring. This includes measuring and analysing the accuracy of machine tool spindles along with five-probe thermal stability for thermal distortion work. The results lead to the identification of factors that are limiting the machining process [7].

Equipment

The recommended instrumentation and test equipment is as follows:

(a) a displacement measuring system with adequate range, resolution and accuracy (eg. capacitative probes).

(b) temperature sensors with sufficient resolution and accuracy.

(c) data acquisition equipment such as a computer based system in which all channels are sampled at least once every 5 minutes and data is stored for subsequent analysis.

(d) precision test mandrel, preferably made of steel.

(e) fixture or "five probe nest" in which to mount the displacement transducers, constructed again from steel.

Figure 1 shows the five sensor system for long duration thermal stability tests on a vertical spindle machining centre.

Transactions on the Built Environment vol 12, © 1997 WIT Press, www.witpress.com, ISSN 1743-3533

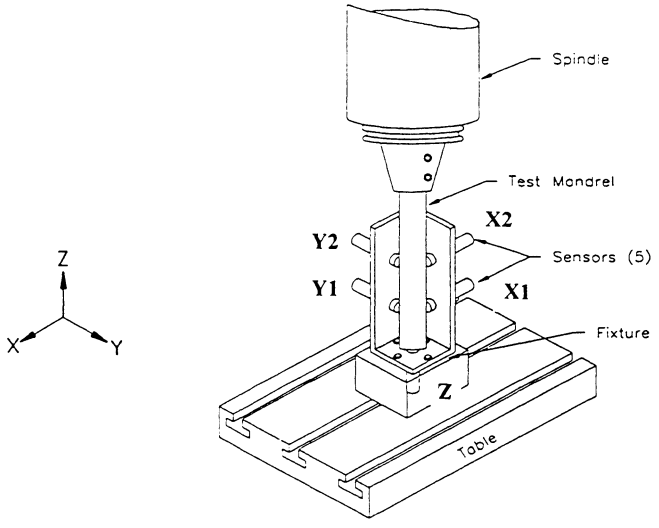

Figure 1: Five sensor test system.

Test method

Essentially the tests are concerned with monitoring the displacement of the high precision test mandrel which has been mounted (with a suitable collett) in the spindle of the machine tool. With the five-probe configuration displacements may be monitored in the X1, X2, Y1, Y2 and Z planes, providing radial error, axial error, and thermal tilt information. The non-contact capacitative transducers are set up to ensure that they are operating at their mid range point so that drifts either side of this mid-point can be observed.

Ambient air temperature is also measured in the close vicinity of the machine and at the same elevation as the spindle nose while temperatures may also be monitored on the machine table and as close as possible to the front spindle bearing.

All displacements and temperature sensors are interfaced to the data acquisition equipment so that thermal drift and temperature changes can be monitored and recorded over fixed time intervals.

In the first test of Environmental Temperature Variation Error (ETVE) the effects of environmental temperature changes on the machine tool are revealed with no running of the spindle. In other words any changes in displacement and tilt are due to the environment in which the machine tool is surrounded. This is an important indication as to the suitability of location of the machine. It is already stated in many standards that machine tools should be sited in an area where the temperature of the environment can be controlled to 20 degrees Centigrade if possible, and that the machine should be protected from draughts and external radiations such as sunlight and those from overhead heaters etc.

The test should be allowed to continue for as long as possible: in situations where a set pattern of activity is observed the test duration should be over some period of time during which most events are repeated. A typical length of time for this test is between 4 and 8 hours after which the range of displacements may be plotted as distortion vs. time.

Figure 2 shows the Environmental error over a five hour period for a vertical spindle machining centre.

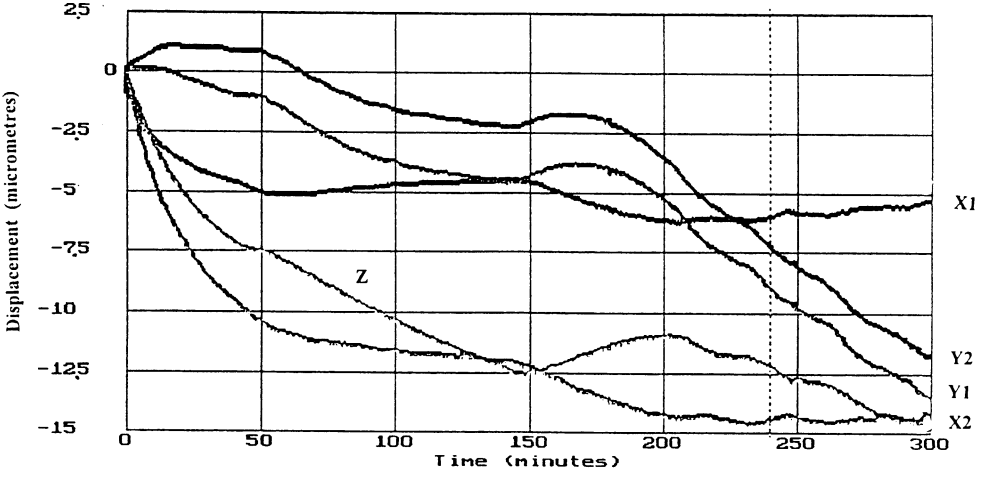

Figure 2: Results of Environmental Temperature Variation Error Test

A second test is then performed to identify the effects of the internal heat generated by rotation of the spindle and the resultant temperature gradient along the structure on the distortion of the machine observed between the workpiece and the tool. The test procedure follows one of two spindle speed regimes: either a variable speed spectrum (as shown in Figure 3) where spindle speed values are specified as a percentage of maximum spindle speed and varied from 25% to 100% in 25% increments, or a constant speed as a percentage of maximum speed (e.g. 75% of maximum).

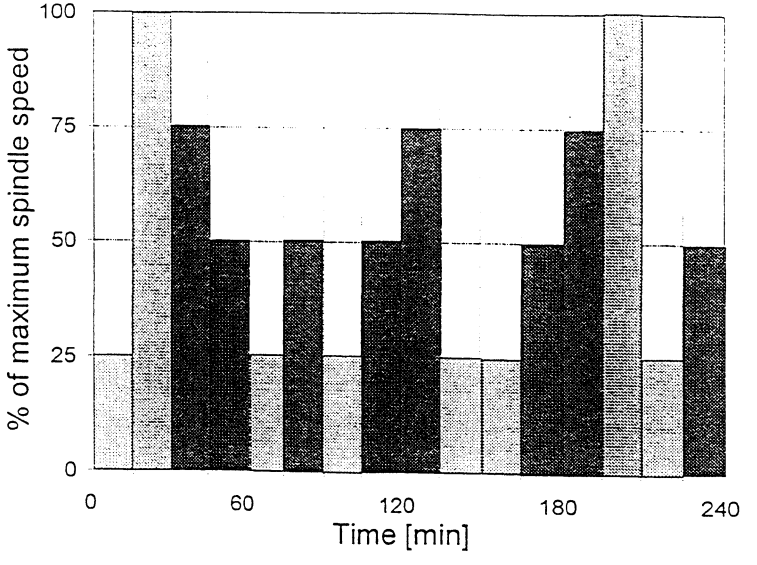

Figure 3: Variable spindle speed spectrum for thermal distortion tests.

All transducer outputs are monitored until the distortion change over any 60 minute period has reduced to less than 15% of the maximum distortion registered over the first 60 minutes of the test, or until a period of 4 hours has elapsed, whichever occurs first. The machine is then allowed to cool down for a minimum period of one hour while monitoring of the transducers is continued. The range of displacements along each machine axis within the first 60 minutes and during the total spindle running period, along with the one-hour cool down may be shown graphically as distortion vs. time or distortion / tilt vs. time. Figures 4 and 5 show thermal distortion data taken from the same vertical spindle machining centre over a four hour period with the spindle running and a one hour cool down with data being recorded at 30 second intervals. Figure 4 shows the thermal distortion vs. time with a fixed spindle speed of 4500 rpm (75% of maximum spindle speed) while Figure 5 shows the equivalent thermal distortion vs. time with the spindle running the variable spindle speed spectrum as given in Figure 3.

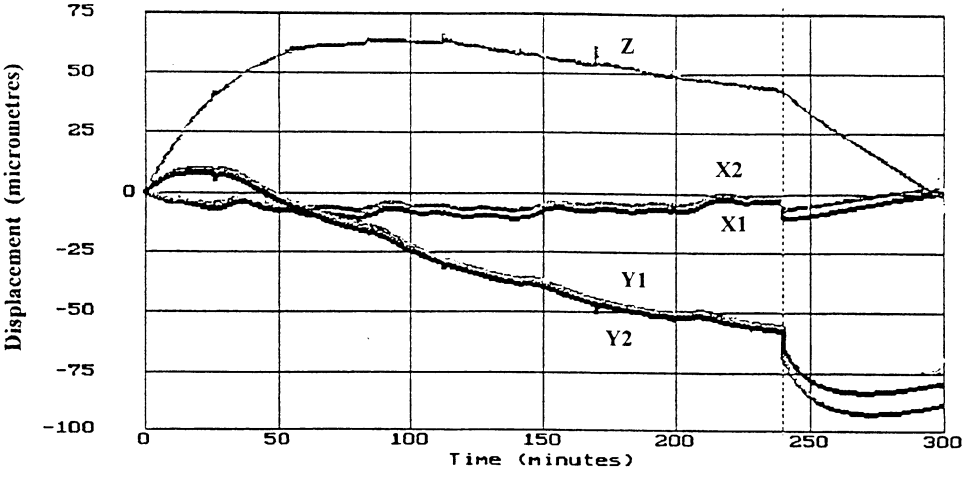

Figure 4: Thermal distortion data - fixed spindle speed (4500 r.p.m.).

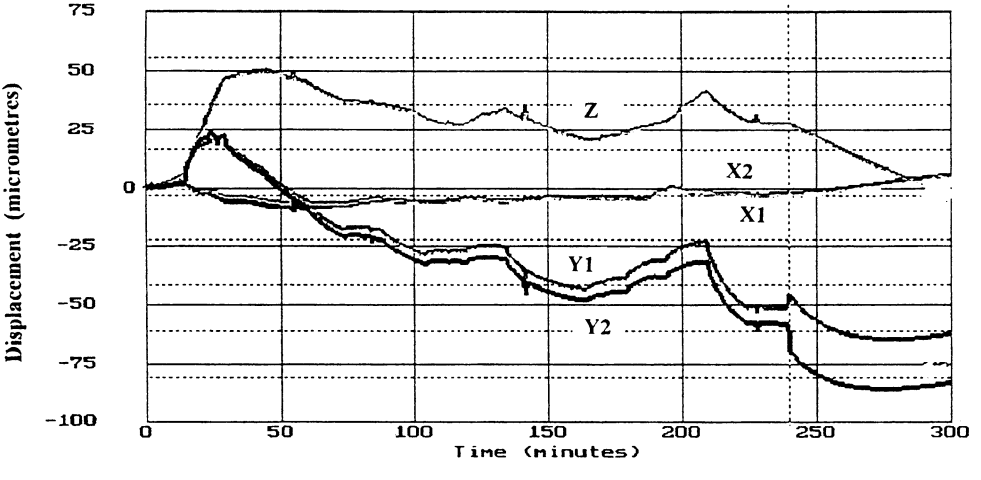

Figure 5: Thermal distortion data - variable speed spectrum.

Results

The thermal drift results recorded from a vertical spindle machining centre giving the Environmental Temperature Variation Error (ETVE) after a five hour period with no running of the spindle are as shown in Table 1.

Axis Drift	X1	X2	Y1	Y2	Z1
Drift / (mm) 5 hours	0.006	0.014	0.013	0.013	0.014

Table 1: Environmental Temperature Variation Error Results.

Running the spindle on this same machine over a four hour period at a constant speed of 4500 r.p.m. (i.e. 75% of maximum spindle speed), and as a separate test running the machine from cold according to the variable speed spectrum gave the results recorded in Table 2.

Axis Drift	X1	X2	Y1	Y2	Z1
Constant 4500 r.p.m.					
Drift / (mm) 1 hour	0.006	0.006	0.012	0.011	0.058
Drift / (mm) 4 hours	0.007	0.008	0.063	0.061	0.063
Variable spindle speed					
Drift / (mm) 1 hour	0.008	0.019	0.033	0.030	0.050
Drift / (mm) 4 hours	0.009	0.010	0.075	0.083	0.050

Table 2: Thermal Drift Results Using the Two Spindle Speed Regimes.

The temperature changes from the three temperature sensors: T01 (ambient temperature), T02 (temperature of "probe nest") and T03 (temperature of front spindle bearing) are given in Table 3 for the three tests performed.

Temperature	T01	T02	TO3
Environmental error Temperature changes / (deg C)	2.6	3.2	4.3
Constant spindle speed Temperature changes / (deg C)	2.2	1.8	10.1
Variable spindle speed Temperature changes / (deg C)	1.8	1.9	12.7

Table 3: Temperature changes from the three drift tests.

The data recorded above, particularly the thermal drifts measured, may then be compared with the permissible deviations contained in the British Standard specification for machining centres BS4656 : Part 30 : 1992 [8]. In this machine specific standard Test D4(b) gives the checking of thermal distortion of the structure on a vertical spindle machining centre and gives permissible thermal deviations of 0.050mm for axes up to 1000mm and 0.100mm for axes in excess of 1000mm.

Conclusions

In order to perform any thermal drift tests the capacitance transducers must first register their positions relative to the test mandrel held in the spindle. However in order to obtain this information the spindle has to rotate at 10%, 50% and 100% of maximum spindle speed for 20 revolutions in each case, as stated in the American ASME B5.54 standard [3]. During this time, of course, some thermal drift will occur. Once the system recognises the transducers configuration and output the thermal tests can then commence. What is evident from this sequence of operation is that the machine tool is not truly starting from a static or "hold" condition since there has been spindle rotation immediately prior to the test. Otherwise the equipment will have to remain on the machine and the test started when thermal equilibrium has been attained.

It can be seen that thermal drift may be assessed using two different spindle regimes (i.e. constant spindle speed or using a variable spindle speed spectrum). These two general methods of test do however generate different results. The variable speed option relies on 'a simple spindle speed spectrum' with an example given in the draft standard. It is, however, solely dependent on the timing and number of the 100% spindle speeds within the spindle speed

regime as to the degree of thermal drift that may be encountered. In the example given in this paper spindle speeds of 100% and 75% were performed between 15 and 45 minutes into the test thereby increasing the thermal growth over that time period. It is felt that a fairer and more easily comparable method of test would be that of constant spindle speed (at an agreed percentage of maximum spindle speed).

The thermal drifts that have been recorded on this vertical spindle machining centre are outside the tolerance permitted for this size of machine. It would appear that further work needs to be performed on a variety of machine tools from floor borers, milling machines to machining centres so that realistic permissible deviations can be laid down in the machine specific standards.

The capacitance transducers used in this series of tests were shown to be extremely sensitive picking up the slightest movement. This became obvious when regular "spikes", each of about 0.00001mm amplitude appeared in the data every 30 minutes. On investigation it was found to coincide with the Sheffield to London high speed train service, the railway lying just a quarter of a mile from the factory where the tests were being performed. Ground borne vibrations transmitted to the test location were being sensed by the capacitance transducers. It is essential therefore that machine tools should be installed in accordance with manufacturers recommendations and that anti-vibration mounts, if necessary, should be used.

Finally, with this new spindle error and thermal distortion standard shortly to be included in the ISO 230 series of standards it is now even more of a requirement for these measurements to be made on a range of machine tools. The machine tool manufacturer and agent will both need to know how their measured errors compare with the permissible deviations laid down, while machine tool users may need to perform these tests to ascertain machine tool accuracy and to repeat tests at intervals so that spindle wear and bearing defects can be assessed as a form of condition monitoring.

References

[1] International Standard ISO / DIS 230-2
Test Code for Machine Tools - Evaluation of Thermal Effects.

[2] British Standard BS3800 : Part 3 : 1990
General Tests for Machine Tools : Method of Testing Performance of Machines operating under loaded conditions in respect of Thermal Distortion.

Transactions on Engineering Sciences vol 16, © 1997 WIT Press, www.witpress.com, ISSN 1743-3533

[3] American Standard ASME B5.54 - 1992
Methods for Performance Evaluation of Computer Numerically Controlled Machining Centres.

[4] Tlusty J.
System and methods of Testing Machine Tools
Microtechnic, vol. 13, 1959

[5] Hardwick B.R.
Further developments of techniques for software compensation of thermally induced errors on CNC machine tools.
Laser Metrology and Machine Performance LAMDAMAP
pp 47 - 63, Southampton, 1993
ISBN: 1-85312-241-6

[6] Sheridan T.
Know Your Machine Tool
LION Precision, 1991

[7] Martin D.L. et al
Precision Spindle and Bearing Analysis
Proceedings of the 6th International Conference on Metrology and Properties of Engineering Surfaces, pp 187 - 193, Birmingham, 1994

[8] British Standard BS4656 : Part 30 : 1992
Accuracy of Machine Tools and Methods of Test
Part 30 : Specification for machining centres and computer numerically controlled milling machines, horizontal and vertical spindle types.